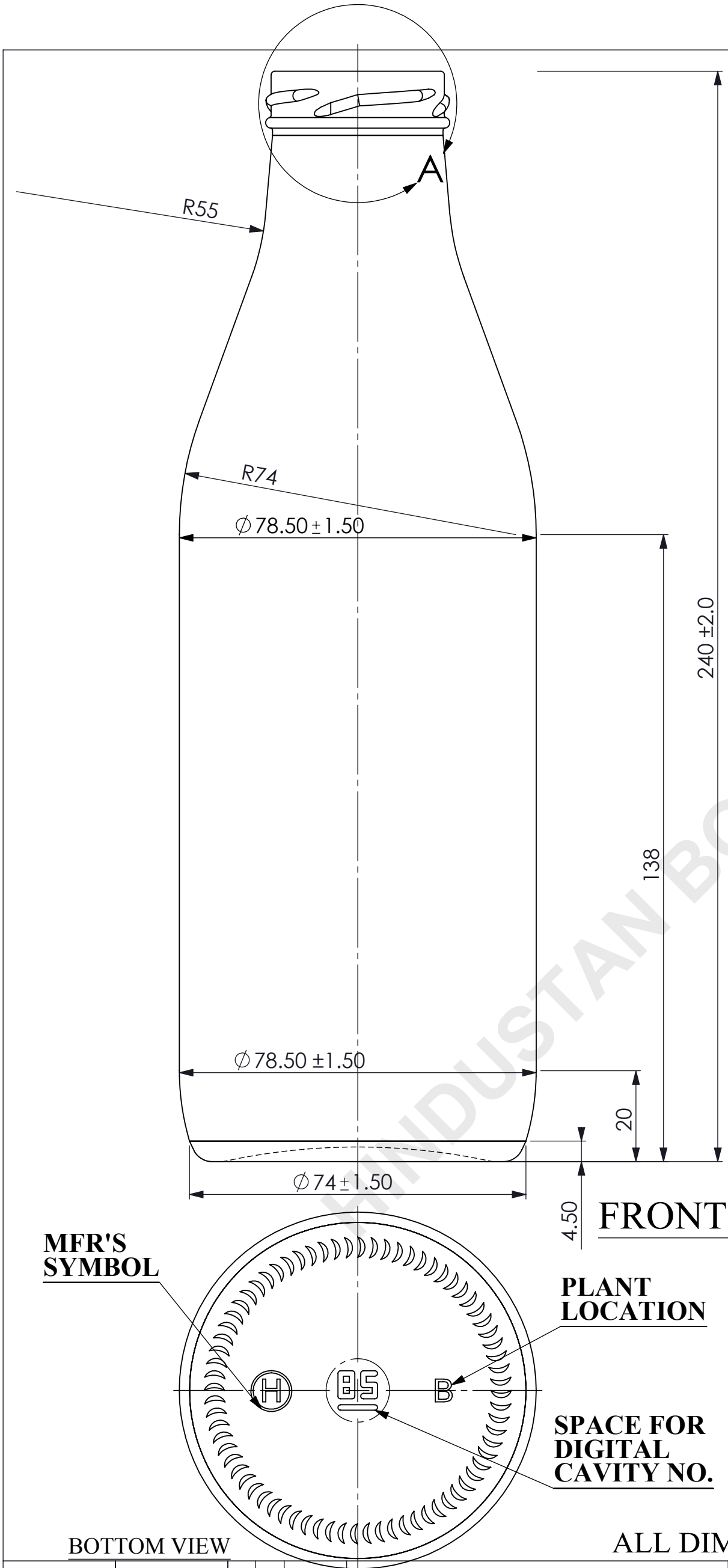

FRONT VIEW

BOTTOM VIEW

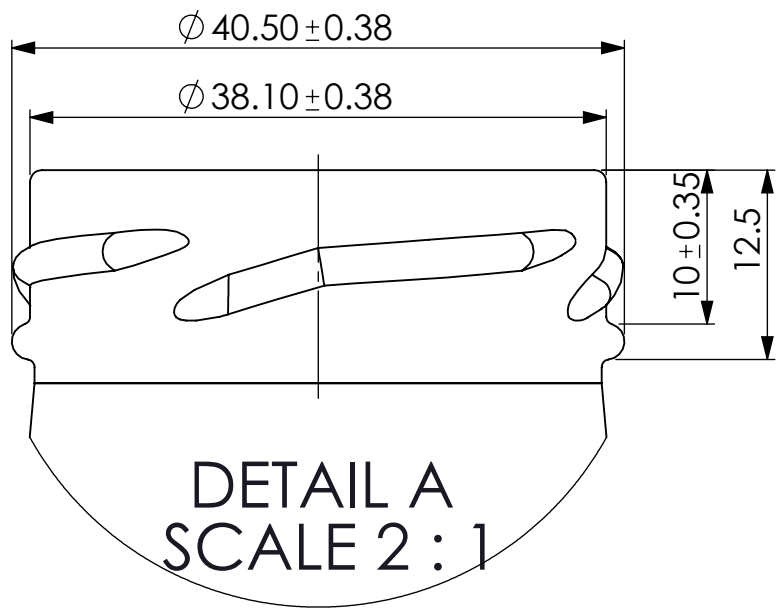

DETAIL A
SCALE 2 : 1

43 MM LUG SPECIAL

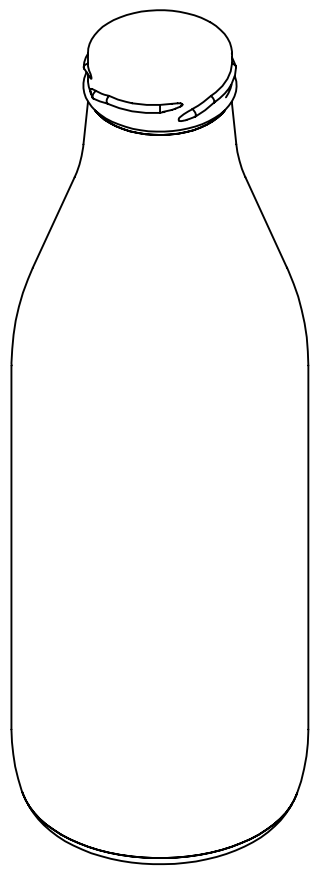

ALL DIMENSIONS ARE IN MILLIMETERS

HINDUSTAN BOTTLES

PROCESS	**NNPB**								
MINIMUM THROUGH BORE	–								
FILL POINT VERIFIED	--								
TILT ANGLE	–		**No.**	**REV.No.**	**REVISION**	**DATE**	**CHK**	**DRC**	
MAXIMUM DEPTH OF STANDARD ENGRAVING	–	**FILL-POINT**			-				
MAX. GAS VOLUMES	–	**BRIMFUL CAP.**			**779.0 ± 7.0 ML.**				
REF DRG No :- W1-01037		**WEIGHT**			**315.0 ± 20.0 GMS.**				
MOULD EQUIPMENT ORDERED BY		**FINISH**			**43 MM LUG SPECIAL**	**COLOUR**	**FLINT**		
PLANT	**B**	**SURFACE TREATMENT**			**NO**	**C.C. NO. HNG-00421**			

SPECIFICATION AGREEMENT ARE BASED ON TOLERANCED DIMENSIONS ONLY
DO NOT SCALE DRAWING
COPYRIGHT RESERVED. NOT TO BE COPIED IN WHOLE OR PART WITHOUT WRITTEN PERMISSION FROM H.N.G.& I. LTD.

HINDUSTHAN NATIONAL GLASS & IND. LTD.

TITLE:- 750 ML ROUND 43 MM LUG BOTTLE

CUST	**COMMON MARKET BOTTLE**		
DRN	Sandeep	**DR. DT.**	12/08/2012
CHK.		**CHK. DT.**	
APPD.		**APPD. DT.**	

DRAWING No. **HNG-00421**

A3

REV.